EUROMOTOELECTRICS.COM

EnDuraLast / Sachse Electronic Ignition System Installation Guide

EME Part # EDL-BOIGNS

Crank mounted optical trigger for BOSCH 3-phase Alternators Made in Germany

ENDURALAST

ELEKTRONIK SACHSE

Euro MotoElectrics

2505 W 2nd Ave. #14 Denver, CO 80219 - USA

www.euromotoelectrics.com
info@euromotoelectrics.com

Tools Required

- 5 mm Allen wrench (for removing timing cover)
- 6 mm Allen wrench (for removing rotor bolt)
- Small Flat Blade screwdriver (for removing the 3-phase connector)
- Needle nose pliers
- Diagonal cutters (dykes)
- Razor blade or Exacto knife
- Painter's masking tape (optional)
- Thread Lock Fluid (Loctite blue)
- Dynamic timing light (optional)
- Inch-lb torque wrench with 5 mm and 6 mm Allen bolt drivers (optional)

Notes & Disclaimers

The installation of this electronic ignition system assumes the installing technician has basic mechanical and electrical skills. Please understand that working on 30+ year old motorcycles may require additional work to the wiring not specifically covered in these instructions.

These instructions cover the installation of the electronic ignition on BMW motorcycles model years 1970 through 1995. After 1990, BMW changed the wiring to the ignition circuits and it is not compatible with this ignition system without the addition of a relay. Otherwise damage may occur to the Ignition Module and render the emergency kill switch ineffective. This kit can be made to work with all known ignition modifications and aftermarket parts for these models.

Warranty

This kit is warranted from defects in material and workmanship for 1 year from date of purchase. Euro MotoElectrics disclaims all other warranties, either expressed or implied. This includes any implied warranty of merchantability of fitness for a non-specific use, and neither assumes nor authorizes any other person or professional installer to assume for it any liability in connection with the sale of this product, or for any consequential damages or incidents arising from its use.

Your kit consists of a sensor (EDL-PU-64) and a module (either the EDL-310 or EDL-312)

EDL-BOIGNS Parts Inventory

Item #	Qty	Description
1	1	Trigger Unit
2	1	Ignition Module
3	1	Ignition Module Plug
4	1	8” Cable Ties
5	1	Velcro Patch
6	2	M5x12 Allen Bolts & Washers
7	3	Insulated Ring Connectors
8	2	Insulated Spade Connectors
9	1	Rubber Grommet
10	1	Allen Wrench
11	1	Screw Driver
12	16”	Black wire
13	16”	Brown Wire
14	16”	Red Wire
15	1	Disk Adhesive
16	1	Wheel Hub
17	1	Timing Wheel
18	6	4” Cable Ties

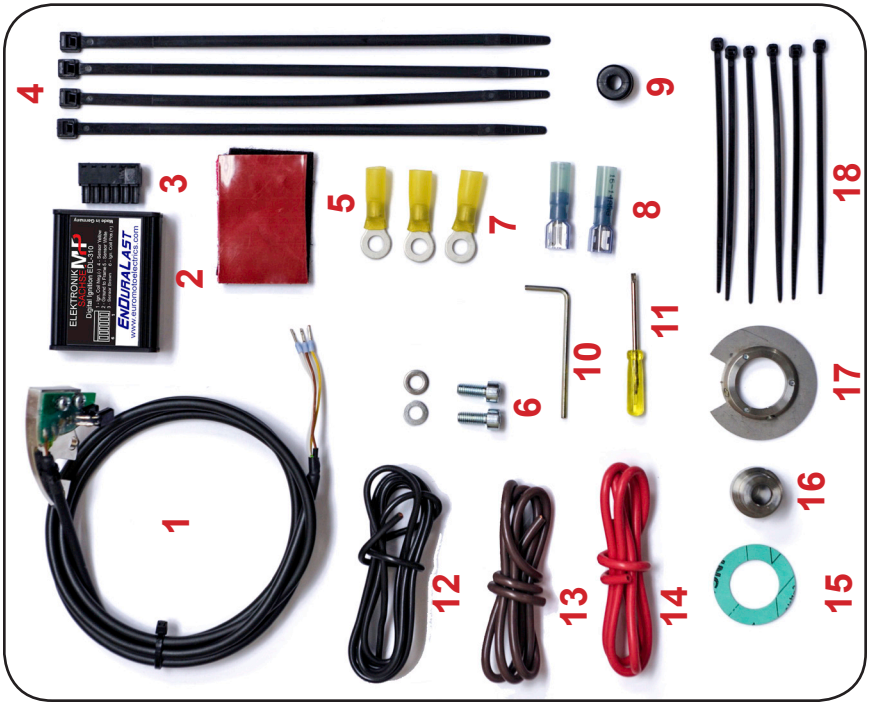

Step 1: Disconnect Battery Ground

Disconnect the black GROUND lead from your battery, wrap in electrical tape to prevent shorting the system while working. *A short can be damaging to the diode board. Replacements are available from www.euromotoelectrics.com.*

Step 2: Remove Gas Tank

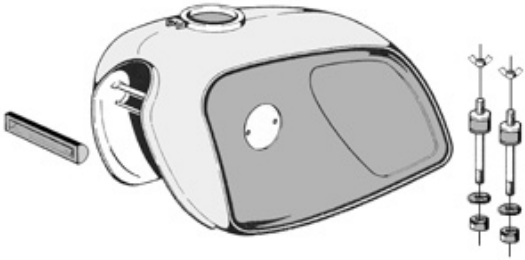

Place bike on center stand, flip open seat, and remove tool box. The seat doesn't need to be removed if it and the tank are stock.

Turn off both fuel petcocks and remove the gas lines from the petcocks. If fitted, remove the gas overflow line under the tank.

Tighten the steering damper (if equipped) so the front wheel remains straight ahead.

Unscrew and remove the wing nuts (or on later year models, plastic knurled nuts) at rear of tank. Lift rear of tank until the cross piece clears the top of the two studs. Then slide tank back as far as possible (about 1/2 inch). The front of the tank will now clear the front rubber support.

Unless it is stuck on, remove the rubber front tank support (to keep from losing it, it falls off easily).

Step 3: Remove Front Engine Cover

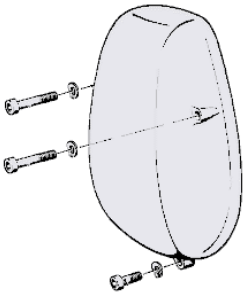

With 5 mm Allen wrench, remove the front engine cover:

(Later models and R65s only have the two top bolts)

Step 4: Remove Existing Ignition or Tune up (1970-78) - Optional

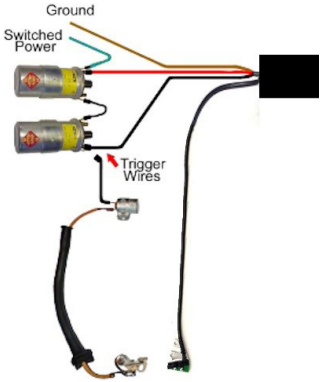

The original points ignition components on 1970-1978 Airheads (advance unit, points, points plate, condenser and points compartment grommet) can be left in place for a backup to the electronic ignition, or since they really aren't necessary, they may be removed.

Left in place, the points rubbing block, the points contact surfaces, and the mechanical advance unit would normally wear. To prevent this, we will perform a standard ignition tune up and then remove the mechanical advance unit. To revert back to the stock points system, simply slide the advance unit back on the cam nose and change one wire at the ignition coil.

NOTE: It has been suggested that it may be easier to disconnect the points at the coils rather than at the capacitor for easy re-installations of the points system if need be. See the owner's manual, shop manual, or Clymers, Haynes or Chitech manuals for stock ignition tune-up procedures

Remove the mechanical advance unit, replacing the 10 mm nut and wave washer on the end of the cam nose. Don't over tighten this nut! Install it with a torque wrench to 54 inch-lbs (4.5 ft-lbs). Store the old mechanical advance unit in a Zip-lock bag in the bikes' tool kit.

For later models with electronic ignition, remove the ignition control unit, located on the right side of the frame just back from the coils.

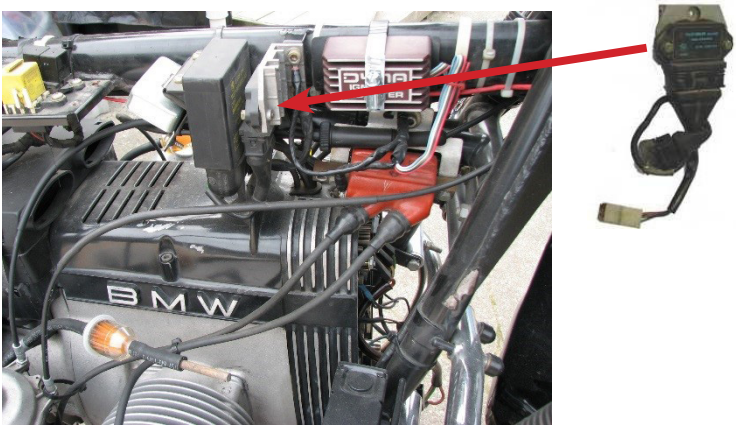

There are two wire harness' leading to the stock ICU. The cable connected to the white three plug connector is a **switched power source**. Use the green and yellow wire from this connector later for the power to the Ignition Module (Slot 6) and the relay for the coils.

Step 5: Remove Bean Can Ignition (1979-90)
(optional to leave in place for backup ignition system)

Similarly, for 1979-1980 Airheads with points or the "bean can", the entire bean can unit is removed:

- Disconnect the cable going to the bean can.
- Remove the two M5 5mm Allen bolts on each side of the bean canister and pull it off.

Step 6: Install Cover Plate (optional)

For 1981-1995 Airheads, the “bean can” needs to be replaced with the optional cover.

The Cover Plate can be ordered from Euro Motoelectrics,
Part # BMW-COVER

Remove the two M5 5mm Allen bolts, pull off the bean can and fit the cover plate. Secure with the original two M5 bolts.

Step 7: Remove / Disconnect Non-Stock Ignition Components Ignition (1978-80)

Remove any points amplifiers (also called “points” boosters) from the system. These will normally be found tie-wrapped to the motorcycle frame under the tank. They cannot be used with the EnDuraLast Electronic Ignition. If you are not thoroughly familiar with the history of your 30+ old Airhead, you may be surprised these were installed by a previous owner.

Accel units were popular in the 1970s.

The Dynatek DBR-1 is the most commonly used points amplifier on Airheads today. There may be two!

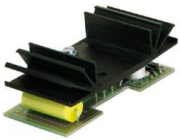

Some users used the K2543 kit available from many sources Including Apogee Kits and Arcade Electronics.

If your engine had been upgraded to an older generation electronic ignition, usually Boyer or Dyna, remove it completely. Your new EnDuraLast Electronic ignition is superior to these older units in every way: more robust packaging, better ignition curves, and crank-driven to avoid the vagaries of cam-driven timing.

Dyna III

Boyer Micro Digital
(Formerly MkIII)

Step 8: Install Wheel Hub on Rotor Bolt

With a 6mm Allen wrench, remove the center bolt holding the Bosch rotor to the crankshaft. Often this can be removed by “jerking” the wrench without holding the motor from turning. *If the bolt won’t break loose, place the transmission in gear and apply the rear brake. This will keep the engine from turning.*

Loosely assemble the timing wheel, part #18 (in the “Inventory” parts explosion) on the wheel hub, part #17, so the wheel can rotate freely on the hub.

Re install the Center Bolt and tighten with a torque wrench with a 5 mm Allen bit to 14 ft-lbs (168 inch-lbs) with a small amount of thread lock (Loctite blue). Do not over tighten! Our experience shows the existing bold length is sufficient.

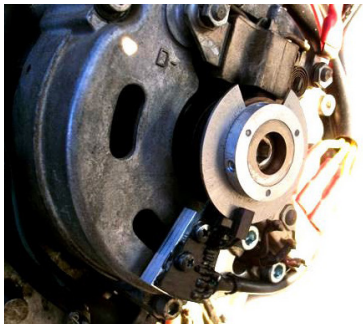

Step 9: Install Trigger

The trigger unit can be installed either under or above the 3-phase connector.

Use a flat blade screwdriver to remove the two screws that retain the 3-Phase connector. Remove the alternator wiring harness and lift to allow enough room for the ignition sensor to slide under the WVU (3-phase) Connector

We suggest installing the outer most screw first, then rotate the assembly in place so the disk is seated in-between the pickup slot. Tighten the two M5x12 Allen Bolts with a small amount of thread lock fluid (Loctite Blue)

Be sure the disk does not touch the light barrier and is centered in the light barrier's slot.

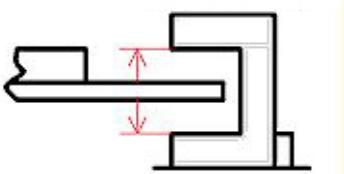

Be careful that the trigger unit does not place pressure on the Y-Terminal wire. If it does carefully push the wire toward the stator and away from the trigger unit. (NOTE: there is no Y-Terminal on /5 alternators unless they have been upgraded to a later style)

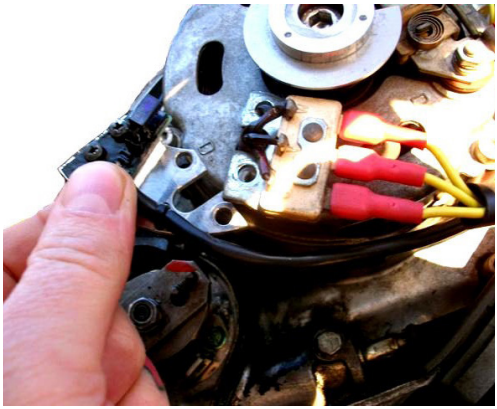

****NOTE SOME CUSTOMERS HAVE REPORTED THAT YOU MAY NEED TO ROUTE THE WIRE FROM THE OPTICAL SENSOR TO THE IGNITION MODULE OUTSIDE OF THE ALTERNATOR COVER TO AVOID POTENTIAL MAGNETIC INTERFERENCE CREATED BY THE ALTERNATOR. YOU MAY NEED TO CUT ABOUT A ¼" SLOT WITH DREMEL TOOL. *****

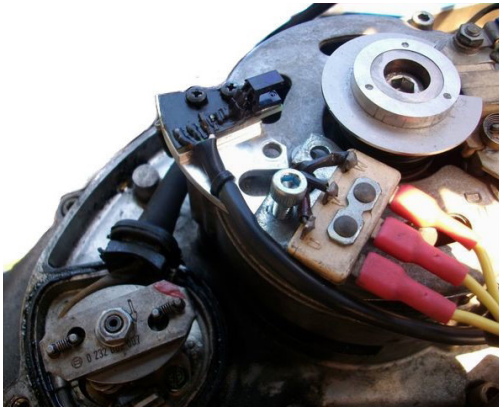

Congratulations! You have installed the ignition sensor. Now time to mount the ignition Module in the following steps.

Two Ignition Module's are available with this system. The EDL-310 and EDL 312. Fitment is the same for either module. The only difference in installation is the optional tach or rev wire on the EDL-312 module.

EDL- 310

3 Curve Ignition Module

EDL- 312

9 Curve Ignition Module

Step 10: Mount Ignition Module

The Ignition Module is attached to a suitable surface, which should not be in the splash-water range, with the included Velcro. This should be sufficient however large cable ties are included for additional security. The wires from the pickup should be long enough to reach most any desired location. Towards the rear of the center frame is often a good location as shown on this R100RS.

Alternatively by the Voltage Regulator is another location with easy access. Location will vary on make and model.

NOTE: Do NOT install the ignition module inside the alternator cover. The ignition module is susceptible to heat and can be damaged if installed under the alternator cover.

Install cable ties and tidy-up the engine compartment.

Step 11: Route Trigger Harness

The ignition module wire can be routed either in the front (diode board side) or back (starter lead side) grommet of the timing chain cover. The front grommet is a much tighter fit and runs the risk of pinching the ignition module wire harness. The back grommet allows much more room for the ignition module lead.

The rubber grommet is already molded for a second wire on 1980 and later bikes; it just needs to be carefully removed and then with a sharp knife cut open to accommodate the trigger wire.

Should the grommet need replacing, the BMW part # is 61-13-1-244-464

Alternatively the rubber grommet can be replaced with a strip of rubber insulation strip. Depending on the routing, a grommet is included in the kit.

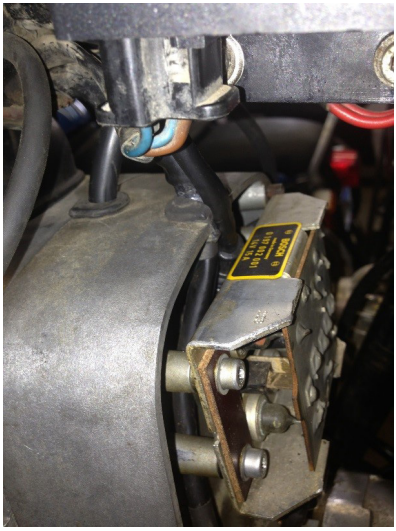

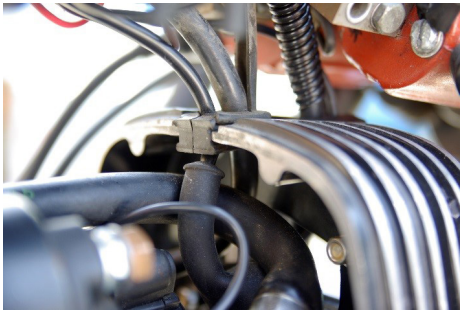

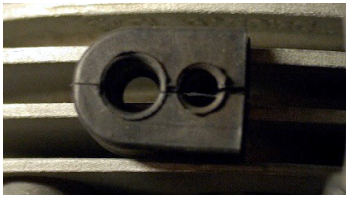

****Others have suggested routing the wiring down the front of the air hood. This may require a small relief of the case and off the front of the air hood, but makes a nice, clean and easy install. The cable routes above the starter and through the front of the case behind the diode board. This leaves plenty of room to work and everything lies in very nicely.*

A note on Coils and your compatibility options:

Compatible Coils

The Electronic ignition is compatible with all stock BMW ignition coils used on models using points and condensers. Specifically, can be used with ignition coils that have a primary resistance seen by the electronics between 2 -3 ohms. Since both stock Airheads and dual-plugged Airheads use two coils wired in series, each of these coils needs a primary resistance of 1 to 1.5 ohms.

The optimal replacement coils available for use with this Electronic Ignition are the Bosch 6V 1.5 ohm “Super” coils, part # BO-Coil6Vx2 available from:

www.EuroMotoElectrics.com

Incompatible Coils

The EME ignition is NOT compatible with conventional electronic ignition coils, which typically have a primary resistance of around .7 ohms. These coils will fry the ignition module. The older black Bosch coils and the newer electronic black Bosch coils look almost the same – except the electronic ignition coils (which can’t be used) have a small yellow lightning icon on them.

The DC1-1 (green coil) is compatible with Single Plugged Engines. It is not compatible with Dual Plugged Engines because that would bring the total resistance to 6.0 ohms. See coil compatibility to the Right.

Examples of Compatible Coils

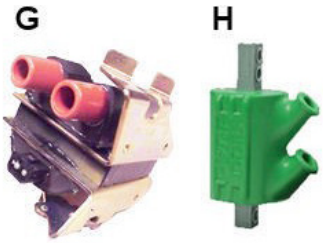

Examples of Incompatible Coils

Single Plugged Engine using 2 Coils wired in Series (stock configuration)

Compatible Coils

Stock BMW points & condenser coils from 1970-1980
Black coil BMW #: 12 13 1 351 584 Bosch #: 0 221 100 022 (/5)
Black coil BMW #: 12 13 1 243 452 Bosch #: 0 221 101 003 (/6, /7, early 100)
Black coil BMW #: 12 13 1 244 142 & 02-21 100 028 (R80RT,R100/T,CS,RS,RT)
C - Bosch Super "Blue" 6V single tower coil (NLA)
A - Bosch Super 6V single tower coil , Brazilian "silver" (EME part # BO-Coil/6Vx2)

Incompatible Coils

G - Any coil from any 1981+ BMW motorcycle,Oilheads, Airheads, K-bikes
G - Any coil from a stock BMW transistorized ignition.

Single -Plugged Engine using a Single Two Tower Aftermarket Coil & Single - Plugged Engine using Two, Single Tower Aftermarket Coils in parallel

Compatible Coils

Accel 140403S 3.0 ohm dual-tower coil
H - Dyna Dual-tower DC1-1: 3.0 ohms "Green"

Incompatible Coils

Accel 140404S .7 ohm dual-tower coil
Dyna Single-tower DC9-4: .7 ohm "blue"
Dyna Single-tower DC10-1: 5.0 ohms "black"

Dual -Plugged Engine using Two, Two Tower Aftermarket Coils in Series

Compatible Coils

D - Dyna Dual-tower DC2-1: 1.5 ohms (2 in package) "brown"
D - Dyna Dual-tower DC5-1: 1.5 ohms (1 in package) "brown"

Incompatible Coils

Accel 140404S .7 ohms dual-tower coil
Dyna Dual-tower DC9-1: .7 ohms "blue"
Dyna Dual-tower DC4-1: 2.2 ohms "gray"
H - Dyna Dual-tower DC1-1 & DC6-1: 3.0 ohms "green"
Dyna Dual-tower DC7 & & DC8-1: 5.0 ohms "black"
Dyna Four-tower DC9-2: .7 ohms

Dual -Plugged Engine using Two, Two Tower Aftermarket Coils in Parallel

Compatible Coils

Incompatible Coils

Accel 140403S .7 ohms dual-tower coil
H - Dyna Dual-tower DC1-1 & DC6-1: 3.0 ohms "green"
Dyna Dual-tower DC7 & & DC8-1: 5.0 ohms "black"

Coil Wiring Overview

The original BMW ignition uses two identical 6V coils wired together in series with a black jumper wire between the inside terminals - this set up must be retained in order for the Electronic Ignition to work properly, otherwise damage to the Ignition Module will occur!

Connections to the coils are made at two places. The outside terminal of the left coil is the “switched power” 12 volt connection with a green wire that goes to the ignition switch. The outside terminal of the right coil is the “trigger” connection with a black wire that goes to the condenser and points under the front engine cover.

All 1970-1986 BMW motorcycle ignition systems are wired like this. If the engine has been dual-plugged, the updated dual-output coils will be wired in the same way. If the bike has aftermarket coils (Dyna, Accel, etc.) they will also be wired in this way.

1986 -1990, all G/S and GS models had a single Dual Output Bosch 0.6 Ohm coil which is not compatible with the EnDuraLast Ignition system. They must be replaced with any of the recommended coils as described earlier.

1991-1995 - BMW changed the “switched power” connections requiring the use of a relay. Proceed to step 14, “Wiring for models 1990-1995”

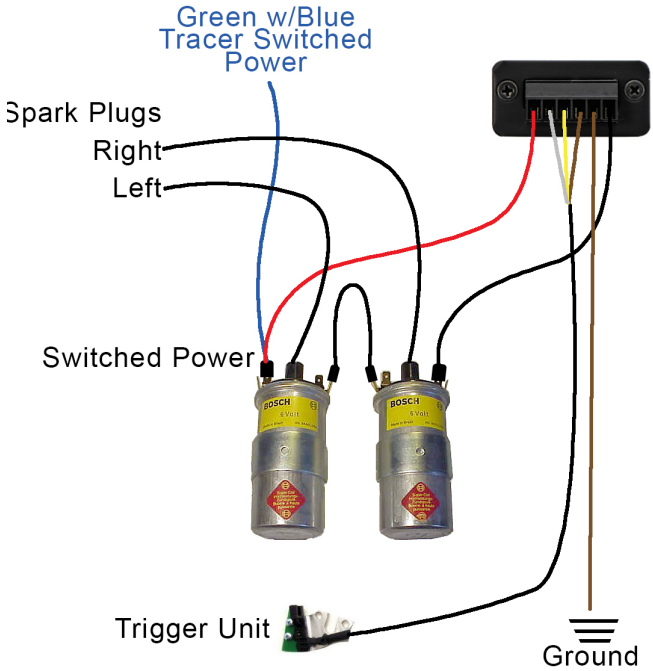

In all cases, ensure that the coils are indeed connected together in “series”- Only one coil is connected to the switched power and only the other coil is connected to the trigger wire. Then a single jumper wire joining the “powered” coil to the second coil as shown in the above diagram.

Verify proper coil connection by putting an ohm meter on the power terminal of the left coil and the trigger terminal of the right coil. The meter should read 2.8 ohms resistance. If the reading is 1.4 ohms, re check the wiring. Incorrect wiring will cause the ignition module to overheat and fail

There were some variations. The green wire became a green/blue wire on later models. For bikes with electronic tachometers, there is a second black wire at the trigger connection Some wiring schemes had two green wires at the switched power connection as well.

For all models up to 1990, wiring in the red, black, and brown wires coming from the Electronic Ignition Module is simply:

1. Adding the red wire to the coil switched power connection,
2. Replacing the black wire at the coil trigger connection, and
3. Adding the brown ground wire between the frame and the coil bracket. Do so by removing coil mounting screw(s). Remove paint from the frame at the mounting bracket to ensure a solid ground connection against the frame.

Step 12: Fasten Wire Connectors

The wires from the sensing unit are pre-fitted with connectors for the Ignition Module. With the included small screwdriver, insert the correct wire in the correct slot per the diagram for your ignition module.

Do not shorten the pickup lead,
cable tie any excess wire for a clean installation.

Using the Red, Black and Brown wires included in your kit, strip 10mm of the wire insulation. Apply solder to tin the wire ends. wire ends are tinned properly with solder. Insert the correct wire in the correct slot per the diagram for your ignition module.

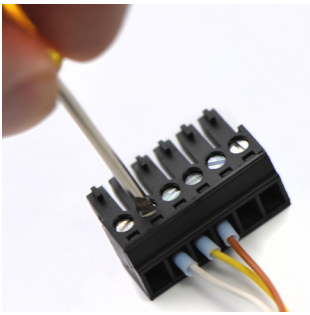

EnDuraLast / Sachse Electronic Ignition System

EME Part # EDL-310

3 curve ignition box standard

1. **Ignition Coil Negative Black Wire (-)**
2. **Negative Ground Brown Wire**
3. **Brown Sending Unit Wire**
4. **Yellow Sending Unit Wire**
5. **White Sending Unit Wire**
6. **Power Supply Ignition Positive Red Wire (+)**
   (+6V/+12V Power Supply, switched by the ignition switch)

The brown ground wire should be kept as short as possible. Please do not shorten the pickup lead and use insulated wire end ferrules on the other cables! In most cases, the original ignition coils can be continued to use, although take care that the primary resistance (measured between the terminals) is at least 2 Ohms!

Step 13-A: Set Dip Switches

Dip switch positions

1	2	
Off	Off	Test mode, Continuous firing of the plug(s), both switches down /off
On	Off	Advance curve 1
Off	On	Advance curve 2
On	On	Advance curve 3

Curve #1 is designed for stock, single plugged heads, curve #2 for modified dual plugged heads, curve #3 is in the middle and, depending on the engine and total setup, might also work for dual plugged heads.

- Curve 1 has a quicker advance as RPM increases and tops out at 34° advance.
- Curve 2 has a quicker advance as RPM increases and tops out at 28° advance.
- Curve 3 has a slower advance as RPM increases and tops out at 32° advance.

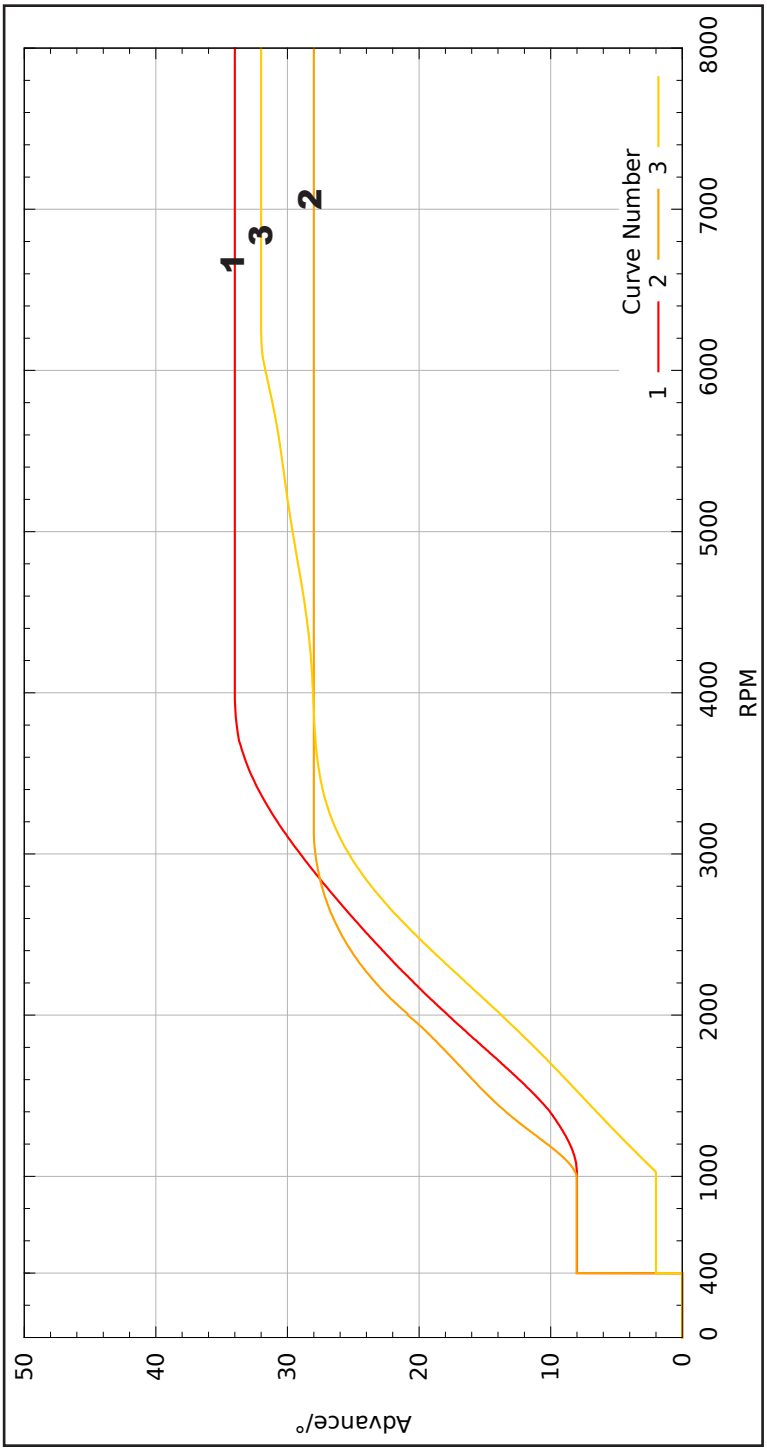
Advance/°
50
40
30
20
10
0
0
400
1000
2000
3000
4000
5000
6000
7000
8000
RPM
1
3
2
Curve Number
1
2
3

EnDuraLast / Sachse Electronic Ignition System

EME Part # EDL-312

9 curve ignition box upgrade

1. **Ignition Coil Negative Black Wire (-)**
2. **Negative Ground Brown Wire**
3. **Brown Sending Unit Wire**
4. **Yellow Sending Unit Wire**
5. **White Sending Unit Wire**
6. **Output for an electronic Tach / Rev Counter**
7. **Power Supply Ignition Positive Red Wire (+)**
   (+6V/+12V Power Supply, switched by the ignition switch)

The brown ground wire should be kept as short as possible. Please do not shorten the pickup lead and use insulated wire end ferrules on the other cables! In most cases, the original ignition coils can be continued to use, although take care that the primary resistance (measured between the terminals) is at least 2 Ohms!

Step 13-B: Set Dip Switches

Dip switches	1	over speed protection at switch down: 7900 rpm switch up: 8700 rpm
	2	rev. counter output frequency switch up: crankshaft switch down: camshaft
Rotary switch (curve selection)	1-9 0	advance curves 1-9 test mode, continuous firing

DIP Switch 1&2 along with the Rotary switch are located on the end of the ignition box.

Dip Switch 1 is your over speed protection.
Dip Switch 2 should be set up for crank/cam applications.
Rotary switch is used to select the desired advance curve (see advance curve illustration following.)

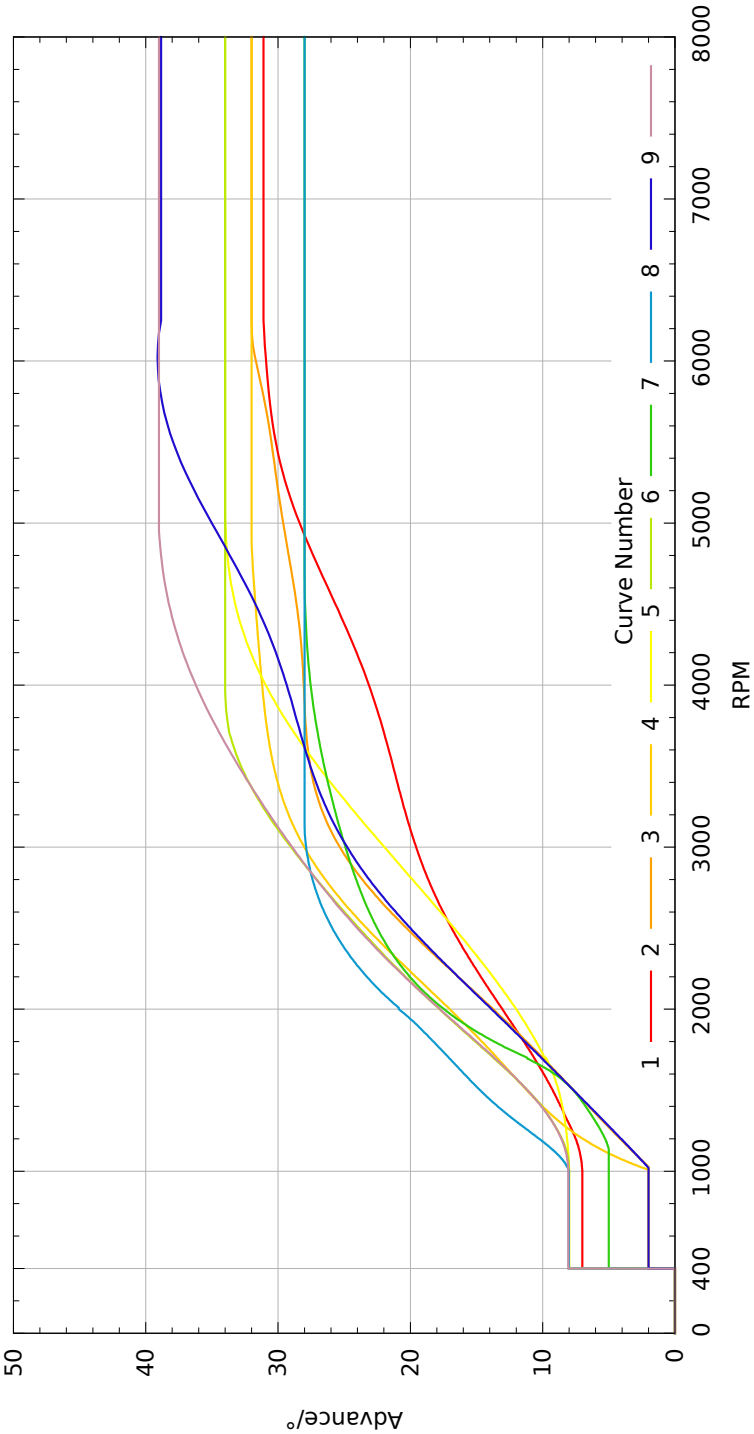
Advance/°
50
40
30
20
10
0
0
400
1000
2000
3000
4000
5000
6000
7000
8000
RPM
Curve Number
1
2
3
4
5
6
7
8
9

Step 14: Connect the Coils

Route the Red, Black & Brown wires from the ignition module to the coils and secure with the included cable ties for a clean installation.

Two options are included in your kit for connecting the coils. Ring terminals (part #8) would be used for coils without a male spade terminal (such as Dyna Coils.) For coils that do have male spade terminals, ¼" female insulated terminals (part #9) with heat shrink built in are included in your kit can be used to attach the Red and Black wires to these terminals.

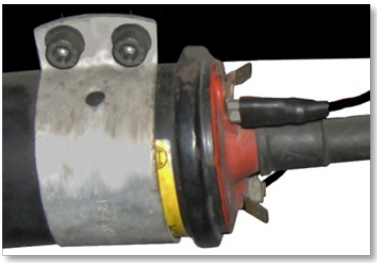

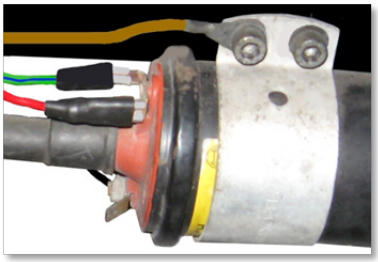

Connect the BROWN wire to either the right or left coil mounting bracket front bolt. (There may be other grounding wires there).

Connect the RED wire to the switched power terminal on the left coil, which already has a green/blue or green wire attached.

Replace the black wire on the right coil going to the condenser with the black wire from the electronic Ignition box. Models with electronic tachometers will have a second black wire connected here.

To return to the stock ignition wiring
(if the old points and condenser were left in place)
simply swap these black coil wires again.

Many Airhead users have upgraded to Dyna or Accel ignition coils, especially dual plugging conversions. They are wired in the same way:

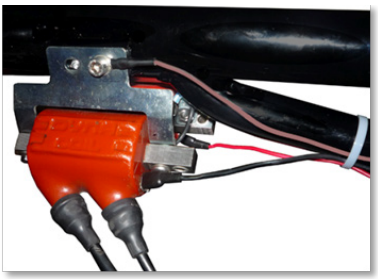

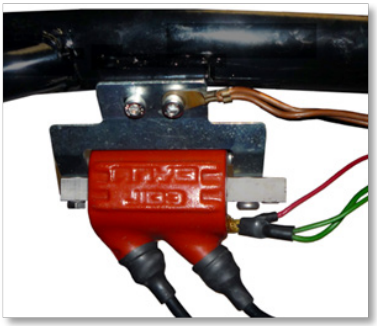

Step 15: Relay wiring for 1991-1995 models

After 1990 BMW changed the wiring to the ignition circuit. The power to the Ignition Control Unit was “switched” separately by the Emergency Kill Switch, while the key switch still “switched” the power to the ignition coils.

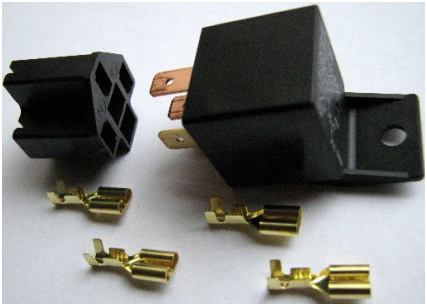

In order to retain the functional use of the Emergency Kill Switch, supply proper current to the coils and prevent damage to the Ignition box, a customer supplied 12 volt relay needs to be added to the system.

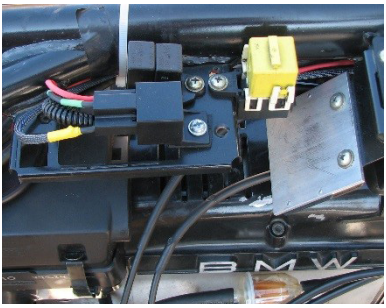

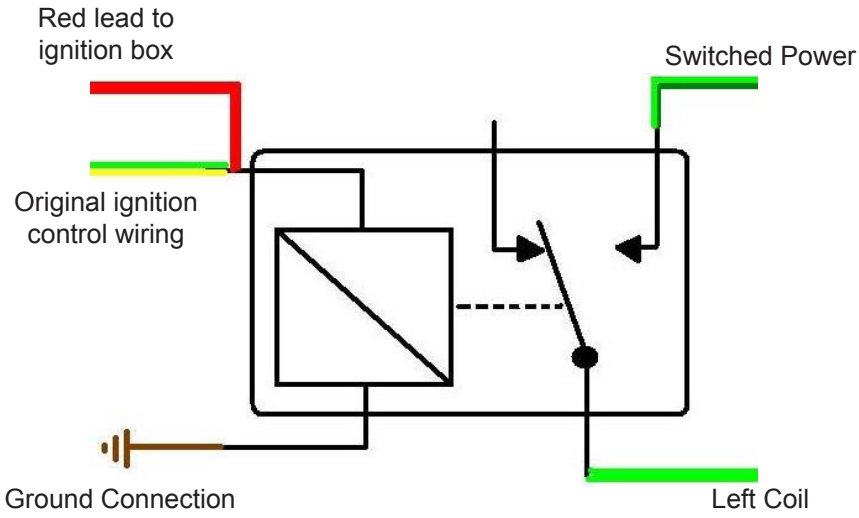

Relays are available through www.EuroMotoelectrics.com

EME Part # REL-207 and REL-107

The green/yellow stripe wire that was connected to the original ignition control unit connects to one side of the Relay coil terminal.

1. Connect the Red wire from the Ignition Module to the same terminal
2. Connect the other Relay Coil terminal to a good frame ground terminal
3. Connect the original green “switched” wire of the ignition coil to one side of the “switch” terminals of the relay
4. Connect the other “switch” terminal of the relay and connect to the left ignition coil
5. Connect the Black trigger wire from the ignition module to the right coil,
6. Continue connecting the Brown wire from the ignition module to ground
7. Connect the thin black tachometer wire to the same terminal of the trigger wire. Verify all connections.

With the key switch “on” and the kill switch in the on or run position, there will now be power to the Ignition box and the relay will be energized.

By switching the kill switch to off, the power is cut to the relay and Ignition box, as well as killing power to the ignition coils.

Step 16: Turn Crank to Top Dead Center (TDC)

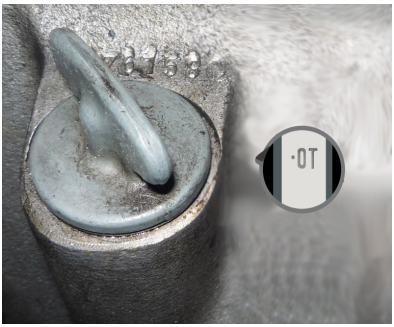

Rotate the crankshaft so that the pistons are at top dead center (TDC), the highest point in their travel in the cylinders. Both cylinders on an Airhead have the same TDC crankshaft position.

The timing marks are stamped on the flywheel and viewed through the timing hole to the right of the dip stick.

There is a groove stamped into the left side of the timing hole. This groove, NOT the center of the hole, is used to align timing marks.

Rotate the engine by putting the transmission into 2nd gear and bumping around the rear wheel. This is preferred over using an Allen wrench in the alternator rotor bolt to turn the crankshaft as this can wallow out the Allen bolt hole. Turn the crank until the OT dot, to the left of the “OT” stamping on the flywheel, is exactly adjacent to the groove in the timing hole. (OT, in German, is Oberer Totpunkt, literally the “top dead point”.) If having trouble turning the engine over, the spark plugs can be removed but this isn’t usually necessary.

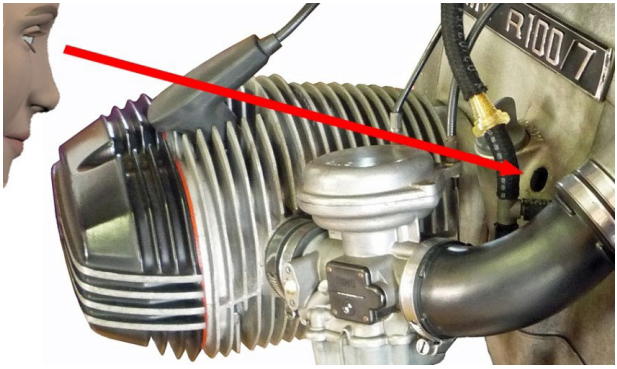

The apparent alignment of the flywheel timing marks with the groove on the engine can vary by several degrees by raising or lowering your head a few inches.

This is due to the viewing angle problem if your eyeball is not exactly perpendicular to the timing hole. The problem is worse on R65s which have a 20 mm smaller diameter flywheel that sits even farther from the timing window.

Step 17: Position Timing Wheel

Attention! Remove the spark plug caps before adjusting the timing wheel. Avoid solar radiation or bright daylight during the adjustment and also in driving mode, otherwise the optical sensor can substantially be affected.

If necessary, loosen the two set screws with the provided small Allen wrench (part #11) so that the timing wheel can rotate on the hub.

Turn on the motorcycle's ignition. With the engine at TDC rotate the timing wheel clockwise as viewed from the front of the engine. As the wheel rotates, the LED on the trigger plate toggles when the gap is sensed by the light sensor. It will extinguish when the steel flange on the wheel passes the trigger.

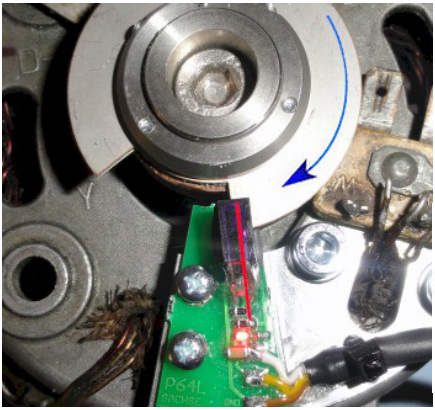

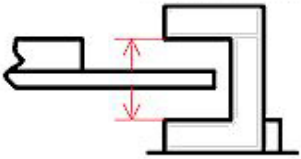

Rotate the wheel a few revolutions to see how this works. (If the LED doesn't come on, the wheel may need to be pulled out of the hub 1 mm or so until it does light).

Slowly rotate the wheel <u>until the LED just turns **OFF**</u>. Tighten the 2 set screws. This will get the timing close enough to start the bike and fine tune the ignition timing with a timing light.

Airhead Timing Marks

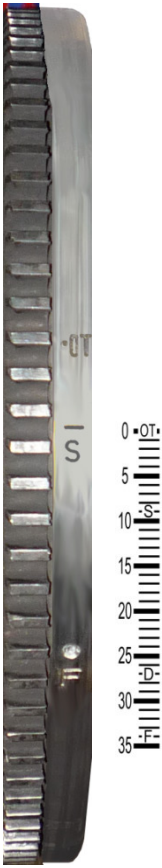

1970 - 1990 BMW Airheads have three timing marks stamped on the flywheel:

- OT: Top Dead Center used for adjusting valves & Ignition timing.
- S: Static Ignition timing, Spaetzuendung, minimum or retarded advance. This is the timing mark to use when timing with the engine off or at idle.
- F: Fast ignition timing, Fruehzuendung (spark advanced), the maximum ignition advance. On later engines, the letter “F” was changed to a “Z”.

The horizontal line above the “S” and the dot above the “F” are the actual marks to use for timing. Some flywheels have two lines, one above and one below the timing letter. These indicate the permissible “range” of the timing, +/ 3° due to “split images”, i.e., the difference in timing between the right and left cylinders. Turning the engine over, peering into the timing window, the flywheel will appear to be moving down. From the perspective of a rider sitting on the motorcycle, the flywheel, crankshaft, rotor, camshaft and timing wheel all turn counter-clockwise.

When viewing the flywheel with a stroboscopic ignition light, the “S” horizontal line should appear at idle. As the RPM is increased, the “F” dot mark will slowly move up from the bottom into the window. It will stop moving up at about 2200 – 3800 RPM, depending upon model.

Rarely there may be a flywheel installed incorrectly on the crankshaft (being some multiple of 72° off) so all timing marks are in the wrong place. Re-install the flywheel correctly by installing the flywheel on the crank at TDC (pistons fully extended) with the “OT” mark in the timing window. Flywheels that have been lightened and/or balanced may also have had the timing marks machined off the flywheel. Put them back by measuring the distances from OT to the “S” and “F” marks from the chart on the next page.

The diameter of all 1970-1980 Airhead flywheels is the same: 736.6 mm. So 1° of crankshaft rotation corresponds to 2 mm (2.046 mm actually) on the flywheel. The only exception to this is the R65 flywheel, which is 200 mm smaller in diameter. 1° of rotation of an R65 crank corresponds to 1.5 mm on the clutch carrier (flywheel).

Step 18: Determine “F” Degrees (Full Advance)

The amount of ignition advance built into 1970-1980 BMW Airhead motorcycle was determined by the automatic advance unit or “ATU”. These varied during Airhead production as emission controls were introduced. The amount of advance built into the mechanical advance matched the timing marks stamped on the flywheel. For example, if an ATU had 25° degrees of advance, the distance on the flywheel between the “S” and “F” marks corresponded to 25° degrees of advance.

The 1970-1978 ATUs were primarily set up for power. The 1979-1980 canister models were retarded for emission control. While the EnDuraLast Electronic Ignition replaces the ATU, we will continue to use the “F” flywheel timing mark for identifying the fully advanced crankshaft position.

Models	Static BTDC	Advance Range	Total Advance	OT – F Distance2
Early /5	9° +/- 3°	30° +/- 2°	39° +/- 2°	79.8 mm
Late /5	9° +/- 3°	25° +/- 2°	34° +/- 2°	69.6 mm
Some /6, early /71	6° +/- 3°	25° +/- 2°	31° +/- 2°	63.4 mm
Some Late /6 and /7	6° +/- 3°	28° +/- 2°	34° +/- 2°	69.6 mm
1979 – 1980 (canister)	6° +/- 3°	26° +/- 2°	32° +/- 2°	65.5 mm
1981+ (electronic ign)	6° +/- 3°	26° +/- 2°	32° +/- 2°	65.5 mm

(1) After Jan 1, 1978, the static timing mark was retarded from 9° to 6° BTDC for better emission control. Most 1978 flywheels were mis-marked, 4 degrees retarded! A service bulletin describes how to time engine with marks at the top of viewing hole. (2) For R65s, reduce the OT – F distances by 78%.

The above chart can be used to determine the total advance in degrees that the “F” mark on the flywheel corresponds to. It will be one of 31°, 32°, 34°, or 39°. When in doubt, especially for the ambiguous 1971 and 1978 model years, measure the distance between the “OT” dot and the “F” line. Then use the last chart column to identify the total advance represented by the “F” line.

Having determined what the stock flywheel “F” line ignition timing is, should it be used “as is”? Conventional wisdom might say to rotate the timing wheel so the “F” line is adjacent the timing groove in the timing window under a strobe timing light.

This may not be optimal. Early /5s probably had too much advance; the early /6s too little. The “sweet spot” for most single-plugged engines is

about 34°, or curve 1.

After a high compression Airhead has been dual-plugged the stock advanced ignition timing point must be retarded. There has been much dialog, testing, and controversy over what the ideal ignition advance curve should be. After 20 years of discussion, the Airhead community consensus is that dual-plugged engines should have idle timing near stock and fully advanced timing of 27° - 28° degrees. For 28° advance select curve 2.

Step 19: Dynamically Check Timing

Warning! On this page, view how the F "dot aligns with the groove on the window, not how it aligns in the window. Your grove may be stamped higher or lower in the window!

Attach a strobe timing light to the left coil spark plug wire. Start the engine and examine the timing marks on the flywheel through the timing window. Raise the RPM until the image stops advancing (moving up) the window, around 3800 (3000 on dual-plugged) RPM. Adjustments are made with the engine off.

To set the timing to the original maximum advance value, adjust (rotate) the timing wheel on the rotor so that at 3800 RPM and above the strobe image looks like this:

To set the timing to 34° (whether or not this was the original BMW value), adjust the timing wheel on the rotor according to the flywheel type as below:

Single Plugged Ignition @ 34° Advance

31° F Mark Flywheel

32° F Mark Flywheel

34° F Mark Flywheel

39° F Mark Flywheel

Dual Plugged Ignition @ 28° Advance

31° F Mark Flywheel

32° F Mark Flywheel

34° F Mark Flywheel

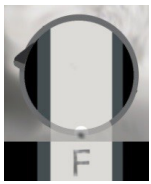

39° F Mark Flywheel

Fine Tuning Ignition Timing

A particular engine's best ignition timing (either for power or fuel economy) is dependent upon engine compression and fuel octane. (Increasing octane slows the fuel burn rate, requiring more advanced timing.) The optimal ignition timing is also dependent on exhaust back pressure and whether a "hot" 336" cam replaces a stock "308" camshaft.

These installation instructions use the best timing for the 1970-1990 Airheads. The 34° advance is conservative and will work with no pinging if the correct octane gasoline is used and the combustion chamber doesn't have higher than normal compression from carbonization. 1981 and later Airhead models, with the lower 8.2 and 8.4 compression ratios, as well as the R50/5, should use 32° for the maximum advance.

The electronic ignition may, of course, be set to any advance value by simply rotating the timing wheel on the rotor bolt. If you know what you are doing you won't need these instructions and the ignition advance can be set to any value. Too retarded timing under heavy load will result in higher exhaust valve and valve seat temperatures. Too advanced timing will result in engine pinging and possible engine damage. Pinging (also known as "detonation" and "knocking") sounds like steel balls being shook in a jar. It is very pronounced on an Airhead.

Significant deviation from the recommended 34° ignition timing value (28°for dual plugged) will eat up both performance and fuel economy.

To determine the absolute optional ignition timing for optimal horsepower on a specific engine, a dynometer or Performance Box timing box is needed. This may allow a couple of degrees advance beyond 34° to be used. A poor man's alternative is to advance the timing until the engine just begins to ping and then backing off (retarding) 2 degrees. Pinging is best induced under an actual load going up a hill. Lug the engine in a high gear, at low RPM, with wide open throttle, with a warmed up engine, using the lowest octane fuel that will ever be used. A hot humid day at sea level is best, if possible.

If ignition timing is advanced beyond what is recommended here to increase mileage and/or power with premium fuel, do not use lower octane fuels without returning to stock timing. The engine could be damaged by pinging.

Step 20: Apply Loctite

Remove each of the two set screws one at a time, apply a tiny drop of thread-lock such as Loctite “Blue”, and re-install. There is no reason to remove these screws once the timing is set correctly except to change the engine timing chain!

Step 22: Install Front Cover

Due to the variance in the Bosch alternator frame sizes, clearance between the timing wheel and front alternator cover must be checked. Damage can occur if the timing wheel is interfering with the front cover during engine operation.

Do **NOT** run the motorcycle with the front engine cover installed without verifying clearance. We recommend you follow this procedure to verify enough clearance between the trigger wheel or sensor and the alternator cover;

1. Apply a uniform thin layer of machinist putty or white grease to the engine cover where the timing disk would make contact. Please understand this is a very tight fit and Euro MotoElectrics cannot be held responsible for damaged parts due to insufficient clearance.

2. Remove your spark plugs.

3. Put your bike into gear.

4. With the bike OFF, In gear, and the spark plugs removed, rotate the back wheel by hand slowly and listen for interference. If you hear a scraping noise near the front engine cover your trigger wheel is likely scraping against the inside of your engine cover.

5. Remove the front cover and verify clearance or contact marks on the grease/putty.

6. If you experience timing wheel interference with the front cover the inside of the front alternator cover will need to be ground down to allow the space needed for the timing wheel to spin freely. Pay special attention to the reinforced ribs within the front cover.

7. Repeat until you can verify sufficient clearance.

It is the responsibility of the installer to make sure there is sufficient clearance between the trigger wheel and/or the sensor to the alternator cover.

- BMW R/5's have more clearance than BMW R/6's
- An alternative solution may be to put washer spacers underneath the alternator cover bolts. This method would provide ample spacing, as well as the additional advantage of allowing more air through to cool the alternator and diode board/rectifier.
- Euro MotoElectrics will not replace damaged components due to insufficient alternator cover clearance.

For 1970-1978 models which have left the original points ignition installed, start the front cover installation by aligning the ignition wire rubber with the corresponding cut-out in the engine cover.

Secure the cover over the top right alignment pin and bolt the cover down evenly.

This pin is on the bottom for 1979-1990 models.

Secure and torque the front engine cover bolts to spec.

These instructions are specific to BMW Airheads upgraded with the EnDuraLast Electronic Ignition. For ignition troubleshooting in general refer to these definitive resources:

- AirMail Technical Articles by Oak Okleshen.
E-mail him for an index at AskOak@aol.com.
- Bob Fleischer's (Snowbum's) Airhead website:
http://bmwmotorcycletech.info/techindex.htm
- Tom Cutter's hundreds of technical tips in the Airlist Archives:
http://micapeak.com/archives/airheads/

Installation Notes:

TROUBLESHOOTING GUIDE

Warning

Do not operate the engine with the spark plug caps disconnected from the spark plugs and:

- not connected to anything (ungrounded), or
- connected to the spark plug but the spark plug not touching anything (ungrounded).

This can damage the coils internally, fry the optical sensor, and damage the ignition module.

Troubleshooting

Battery health is critical for proper engine operation.

- Using a digital voltmeter, the voltage reading MUST be 12.43 Volts or higher.
- If your battery is over 3 years old, it should be replaced.
- If you battery has been discharged 3 times or more, it is sulfated and MUST be replaced!

A Sulfate damaged battery will not

- Accept a charge and may damage your electrical system.
- Provide sufficient voltage and / or current to turn the starter motor.

Make sure the positive and negative cables are free of corrosion, and have clean tight fit.

Battery Voltage	State of Charge / Battery Condition	Reccomended Action
12.6 V	100%	Good
12.4 V	75%	Charge Battery
12.2 V	50%	Replace Battery
12.0 V	25%	Replace Battery
11.8V	Discharged	Replace Battery

Lithium Iron (LI IR) Batteries and Dry Cell (Odyssey) Batteries have a higher internal plate resistance which can overheat charging components as well as interfere with other electrical components such as ignition modules. The ODYSSEY BATTERY is a dry chemistry battery and all vehicle systems are designed to work with wet lead acid chemistry design batteries.

EME will not warranty any clams with usage of LI IR or Dry Cell batteries.

Troubleshooting - No Spark

Engine Doesn't Turn Over

If the engine does not turn over at all, i.e. the starter motor does not engage, there is a problem with the starting circuit or battery. If the instrument lights dim or go out when the starter button is depressed the problem is usually a faulty battery, bad connections on the cables attached to the battery, or bad connections at the starter relay.

If the instrument lights stay brightly lit when the starter button is depressed and you hear the "click" of the starter relay, then the problem is usually the starter solenoid or a bad connection on the fat red cable between the battery and the starter. If you don't hear the starter relay "click", the problem is probably the starter relay itself, the kill switch, the clutch switch, or the connections to these components.

Check Battery Condition

Modern motorcycle batteries are good for approximately 4 years. Every five years, they should be replaced pro-actively because when they fail, they may do so without warning (especially sealed batteries). Note that new batteries, from all manufacturers, may be faulty.

A motorcycle battery cannot be accurately tested with just a voltmeter and certainly not with the LED lights on a Battery Tender. Wet batteries can be tested with a hydrometer, testing each of the six cells. The best test is with a pile load tester or similar tester. A practical test is that the voltage across a battery when the starter motor is turning should not drop below 11V.

Check Battery Grounds

If the battery is good there may be a bad electrical connection. We will check for broken, loose, or corroded connections under load by checking for a voltage drop across various wires. For these tests, we are NOT testing for 12V. We are expecting a voltage of a few hundredths of a volt over a wire where the voltage drop should be near zero.

Place a voltmeter in the "low" DC range if it isn't auto-scaling. Scrape the negative battery terminal clean and firmly attach the voltmeter negative probe. Touch the positive probe on a cylinder cooling fin. With ignition on, depress the starter. There should

be 0 volts! If more than a few hundredths of a volt, there is a bad ground wire connection. Remove the heavy black ground wire at both ends (battery and transmission), clean up the connectors and battery terminal with a wire brush. Replace using a thin smear of dielectric grease. Be careful not to over tighten the bolt which holds the negative ground cable to the transmission – it is hollow and easily snapped off.

Remove the tank. On the brackets that hold the coils, there are one or more brown wires under the nuts on the bracket. Test the voltage between the ring terminals on the brown wire(s) and the negative battery post, with ignition on and starter button depressed. Again, it should be 0V. If more, there is a loose or corroded ground connection at the coil bracket. Remove the wires, the bolts and bracket, clean up with a wire brush, and replace using a slight smear of dielectric grease.

Going forward, it will be assumed that the engine has a good battery and the engine turns over.

Verify No Spark

Check the spark by removing a spark plug, securing it into the spark plug cap, and then grounding the spark plug threads to the cylinder head fins. Turn on ignition, insure the kill switch is "RUN", the transmission in neutral, and hit the starter button. You should see a bright spark in the spark plug as the engine turns over.

If there is no spark, then the possible culprits in order of likeliness are as follows.

Check Power to Coil

Remove gas tank. Ground the negative voltmeter lead to a cylinder head fin. With key ON, kill switch on RUN, touch the red positive voltmeter lead to the left coil terminal with the green/blue wire. You should see 13V. (For bikes without a kill switch, this wire is green.)

If there isn't 13V, a component or connection in the ignition primary circuit is broken. Note that BMW Airhead ignition circuits are not fused.

Use this wiring diagram and the voltmeter or test lamp to determine the “switched power circuit” fault.

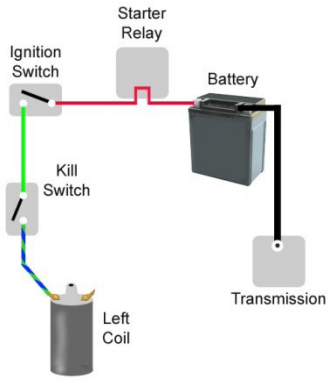

1991-1995 Models with Relay Modification-

Ensure 13V at the relay coil terminals when both key and kill switch are on.

As well there should be 13V on either side of the relay’s switched terminals.

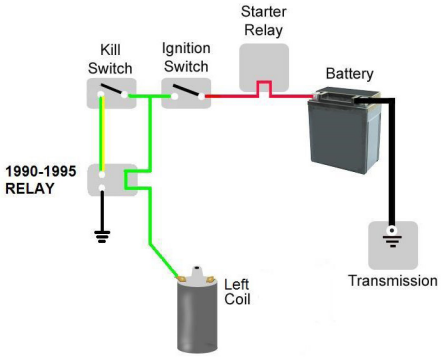

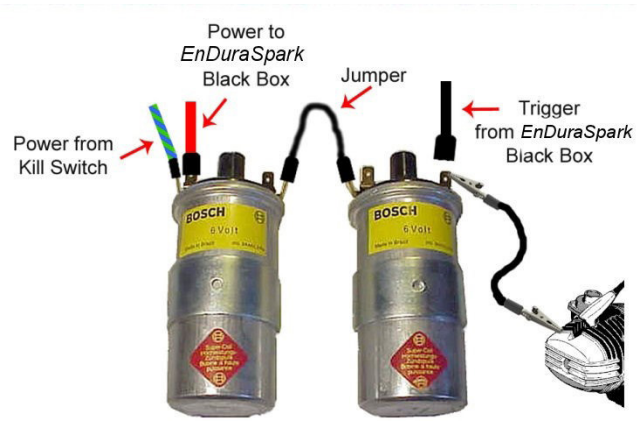

Continuing further, we assume there is power to the left coil as indicated.

Check Secondary Coil Circuit

Remove a spark plug and securely ground the plug threads to a cylinder fin. Position the plug so that it can be seen firing.

Disconnect the black trigger wire on the right coil which goes to the Ignition module. Using a 2' wire with clip leads, clip one end to this terminal. Turn on the ignition and touch the other end of the wire to a cylinder head fin.

Every time you make/break this connection, you should see the spark plug fire. This is what the points used to do: make and break a connection to ground. Repeat for the other spark plug (or other three spark plugs for dual-plugged engines) and verify that each spark plug "sparks". If they do, the coils, plugs, wires, and spark plug caps are okay. Skip to the "Check Timing Wheel" procedure.

Check Primary Coil Circuit

If there is no visible spark at the spark plugs, investigate the coils further. Leave the 2' wire in place (connecting the outer male terminal on the right ignition coil to ground) and connect a voltmeter positive probe to an inside spade terminal of either coil. The voltage should read about 6.5V, half the voltage of the green/blue wire. (After this test remove the wire with clip leads so we don't burn up the coils). If not, the coil is bad (bad primary circuit) or the crimp connections on the jumper wire between coils are loose.

Check the Coils

Disconnect all the wires connected to the coils, including the high tension lead. With a multimeter on the ohms scale, measure the resistance between the two spade terminals on each coil. They should measure 2.0 - 3.5 ohms, the primary resistance of the coil. If outside this range, the coil is bad or you are using the wrong coils.

Measure the resistance from each high tension coil tower to either of the male spade connectors. This secondary resistance will be 12-17K ohms for stock Bosch coils, 11.5K ohms for Accel 140403S coils, and 14K ohms for Dyna DC2-1 coils. If any of these measurements are open circuit, short circuit, or too high resistance the coil is bad.

Check the Ignition Wires and Caps

Leaving the spark plug caps attached to their ignition wires,

measure the resistance end-to-end of the wire/spark plug cap combination. It should be 1K or 5K (depending on the spark plug caps were used. Early Airheads had 1K Beru caps; many users have replaced them with 5K NGK caps.). Test all wires and caps. A measurement over 5K indicates a bad wire or spark plug cap. In that case, remove the cap from the wire and measure the cap and wire independently. The wire should be 1-2 ohms and the cap 1K or 5K ohms.

Replace Spark Plug(s)

If the coils, ignition wires and caps check out okay but there still is no spark when the trigger terminal is grounded, the problem must be the plugs. Replace.

From this point forward, it is assumed that the ignition system passed the "Check Secondary Coil Circuit" test described on the previous page.

Check Timing Wheel

Remove the front engine cover exposing the trigger unit. Grasp the timing wheel and verify that it is slipping on its hub. If so, the set screws have become loose. Follow the procedures for setting the electronic Ignition timing.

Check Ignition Module & Trigger

When all dip switches are set to off, the spark plugs will fire continuously indicating that the ignition module is in test mode. If the spark plugs do indeed spark the ignition module is not the issue making the optical sensor suspect.

Turn over the engine with the starter. The LED on the trigger should turn on and off in the timing wheel range highlighted in red:

- <u>If the LED turns on and off</u> correctly and there is still no spark, on the ignition module, place all the DIP switches in the OFF position. With an external spark plug connected and grounded to the engine, the plug should continuously fire when the ignition is turned on. If not, the ignition module is defective.
- If the plug does fire the cables between the sensor and ignition module, or their connector, is defective.
- <u>If the LED never turns off</u>, loosen the set screws on the timing wheel and slide it in or out slightly on the hub to better align the

trigger wheel between two light sensors on the optical unit. If the LED cannot be made to turn on and off the trigger unit is defective.

- <u>If the LED never comes on</u>, double check there is 12 volts on the coil terminal with the red wire going to the ignition module. If not, there is a loose connection there or a bad cable on the ignition module.

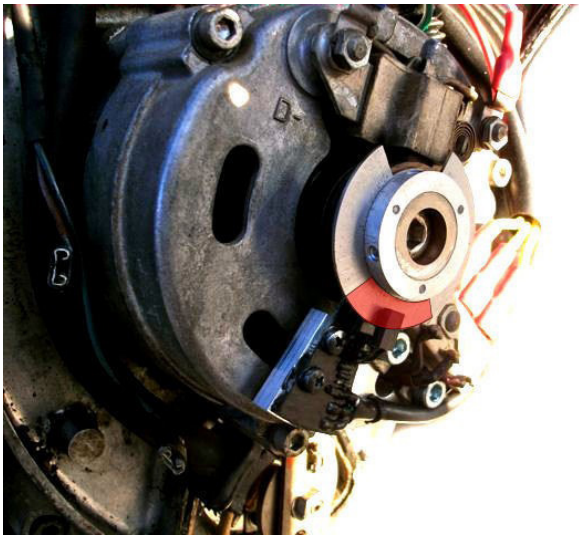

Troubleshooting - Spark Cuts Out Intermittently

If sometimes the engine suspends while driving for 2-3 seconds and keeps running thereafter normally. That means that the ignition has been reset.

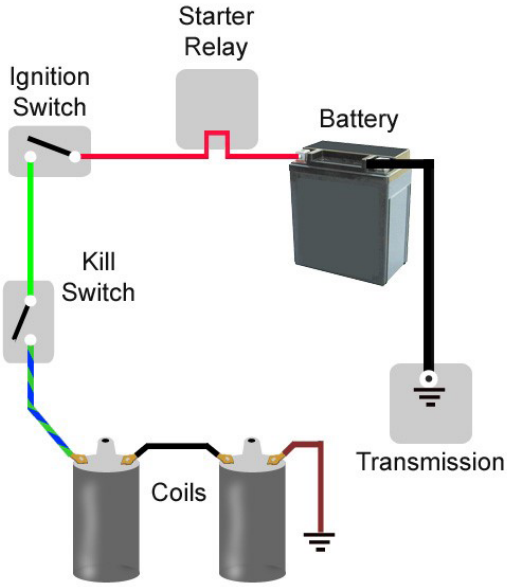

The most likely cause of intermittent spark is a loose connection in the primary ignition circuit.

Follow the previous trouble shooting section on “Check Power to the Coil”. This is usually due to a loose spark plug cap on an ignition wire or on a spark plug. Examine and re-connect if necessary. *Note that a tank bag can sometimes hit the kill switch, shutting down the ignition.*

The other cause possible is a drop or intermittent operating voltage supply (kill switch, starter, fuse holder, terminals etc.) causes this effect. For a test you can connect a cable directly from the ignition coils and the ignition box to the positive terminal of the battery. Also put a second cable from the negative terminal of the battery to the ignition box (secure ground connection). If the engine is running well now you can assume an error in the wiring harness.

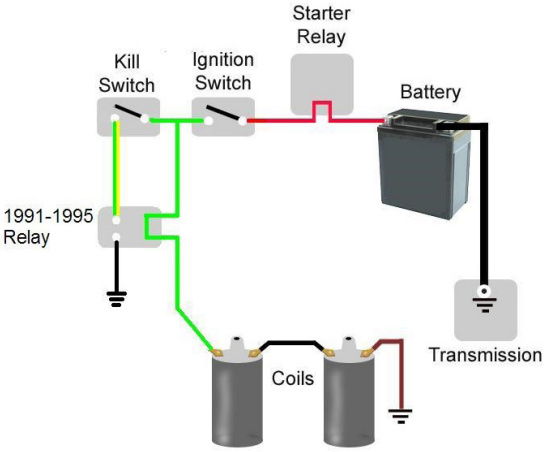

With contact breaker such a bad contact is not noticeable, because a short break for a few milliseconds of the supply voltage doesn’t matter, electronics in contrast are more sensitively.

If the ignition only cuts out in wet weather then the problem is probably a coil, spark plug cap, or ignition wire. Follow the previous trouble shooting section on “Check the Coils” and “Check the Ignition Wires and Caps”. If the bike has the original ignition parts, the ignition wires should be replaced on these 30+ year old machines. Sometimes observing the coils and ignition wires in the dark will identify arcing shorts.

1991-1995 Models with Relay Modification

A poor or loose connection to the relay- either on the relay’s coil side or on the switched terminals may also cause intermittent spark.

Troubleshooting – No Electrical Power

If the entire bike’s electrical system goes dead intermittently (i.e. no instrument lights and no brake lights) then the problem is probably:

- A bad battery connection, either positive or negative cable,
- A corroded connector on the battery end of the battery cables,
- A bad battery,
- A loose connection of the battery ground bolt on the transmission, or
- Corroded red wires on the spade terminals of the starter relay.

On these older bikes there are a couple of places that have been troublesome. The crimp connections on the jumper wire between the two ignition coils can loosen, causing intermittent ignition problems. The right handlebar engine kill switch may be severely corroded, especially on a bike left outdoors or washed with a pressure washer.

Finally, if everything else checks out, the optical element on the ignition trigger may be failing. This is usually caused by lifting a spark plug cap off a spark plug on a running engine.

If sometimes the engine suspends while driving for 2-3 seconds and keeps running thereafter normally. That means that the ignition has been reset. The cause for it can be a defective cap or a loose ignition cable in the coil or cap. But most cases a bad contact in the operating voltage supply (Killschalter, starter lock, fuse holder, terminals etc.) causes this effect.

For a test you can connect a cable directly from the ignition coils and the ignition box to the positive terminal of the battery. Also put a second cable from the negative terminal of the battery to the ignition box (establishing a secure ground connection). If the engine is running well now you can assume an error in the wiring harness. With contact breaks such a bad contact is not noticeable, because a short break for a few milliseconds of the supply voltage doesn’t matter, electronics in contrast are more sensitive and will affect performance – giving an intermittent “miss”.

Troubleshooting – Poor Performance

We assume here that the performance problem is ignition related, i.e., the engine has good compression, has a good battery and wiring, is getting gas, and has correctly adjusted valves. In this context, “poor performance” is synonymous with “weak spark”. We also assume here that the bike is timed correctly, with the correct DIP switch settings in the ignition module box. The following troubleshoots the potential faulty ignition components.

Bad Spark Plugs

Fouled plugs come from too much oil in the combustion chamber. The oil can be from worn or broken rings, worn pistons/cylinders, or worn valve guides. If the problem only occurs on the right cylinder, it may be a problem with the oil breather.

Burnt plugs come from too hot an engine or the wrong choice of spark plugs or coils. Engines usually run hot due to too lean a fuel mixture or too advanced or retarded spark.

Check Correct Spark Plugs

These are the correct (stock) spark plugs per BMW Fiche:

Airhead Model	Model Years	Bosch Plug	NGK Plug
R65	78-80	W5DC or W6DC	BP6ES or BP7ES
R60/6	74-76	W5DC	BP7ES
R75/6	74-76	W6DC	BP6ES
R90/6	74-76	W6DC	BP6ES
R90S	74-76	W5DC	BP7ES
R60/7	76-77	W5DC	BP7ES
R75/7	77-77	W6DC	BP6ES
R80	77-80	W7DC	BP6ES
R80GS	1980	W7DC	BP6ES
R100/7	76-78	W5DC	BP7ES
R100/T	79-80	W5DC or W6DC	BP6ES or BP7ES
R100RS	76-80	W5DC	BP7ES
R100RT	78-80	W5DC	BP7ES
R100S	76-80	W5DC	BP7ES

Do not use Bosch resistor plugs, say for example a WR7DC+. These are plugs with a “R” after the “W” in the part#. This plug is NOT equivalent to a Bosch W7DC spark plug (even though Bosch says it is).

The spark plug gap on all Airheads, both Bosch and NGK, is 0.026-0.028”. This may not be how they are gapped from the factory. A smaller gap will foul more easily, especially on /5 models with the shallow oil pan. Larger than specified gaps (like that shipped with the Bosch) can cause low RPM misfires.

The factory recommended spark plug change interval was 10,000 miles when gasoline contained lead. Modern unleaded fuel leads to longer service life: 20,000 miles is safe.

Check Correct Ignition Wires

Up until 1976, BMW Airhead high tension circuits had separate parts: wires, caps, and rubber boots. Later models had a single integrated wire/cap. The original BMW ignition wires were Hypalon covered copper core non-resistor wires with a resistance of about 2 ohms per foot. They will last about 10 years before becoming hard and non-flexible. Replacement silicone wires will last forever and are not affected by heat, gas or ozone.

Complete sets are available through Euro Motoelectrics:

Part # BMW-WSRR18 (18 inch leads)

Part #: BMW-WSR30 (30 inch leads)

It is important that copper core wires are used, not the carbon powder center ones normally sold at auto parts stores.

Check Spark Plug Caps

Spark plug caps should be 1K or 5K. The original caps on 1970-1978 Airheads were 1200 ohms. 1979-1995 Airheads had integrated zero resistance wires and 5K caps. The original BMW Beru caps had a metal suppression shield around the cap. With age, the Bakelite in these caps can crack. This can’t be seen because of the shield. It isn’t detectable with an ohmmeter test, but the cap will arc with a carbon path short circuit under high voltage.

A good spark plug cap for use with the Electronic Ignition is the NGK LB01EP. These are 1K caps with waterproof (designed for watercraft) boots at each end. They are more reliable than either the separate component BMW/Beru parts or the later integrated wire and cap. All Airhead points & condenser bikes can use 1000 ohm NGK caps. They should be installed with a slight smear of dielectric grease under the

boots (not in the coil tower or cap terminal!) This adds an additional barrier for water and prevents voltage leaks. Only use silicon grease; oil-based greases are conductive.

5K spark plug caps, such as the NGK LB05FP, can also be used with the Electronic Ignition. 5K caps can make a marginal ignition system on a cold engine harder to start compared to 1K caps. For an ignition system in good shape, however, there is no difference between 1K and 5K caps. Non-resistor caps should never be used on an Airhead.

Testing the Wires and Caps

The spark plug caps, wires, and secondary coil resistance can be all checked together by doing a “cap” to “cap” resistance test. For single-plugged engines, leave everything connected and test the resistance between the inside of one cap to the other. This tests both coils, both caps, and both wires. The value should be 12K – 27K ohms.

For dual-plugged engines, check between the two caps on a single coil. The value should be 16K – 24K. Check both coils in this fashion. If any measurement is out spec, disconnect the individual components and check singly.

Installation Notes:

EUROMOTOELECTRICS.COM